UNCONTROLLED COPY

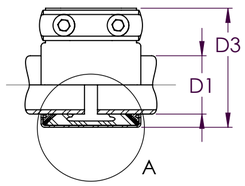

45 WIDE

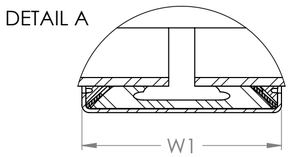

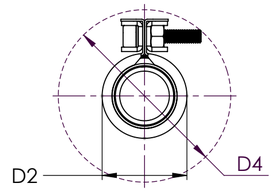

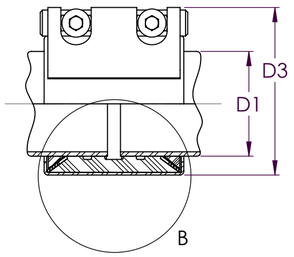

65 WIDE

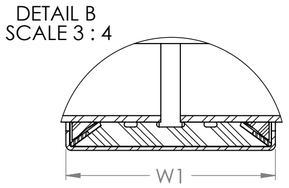

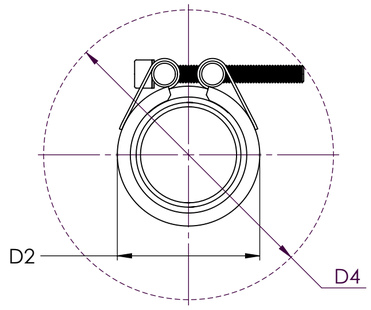

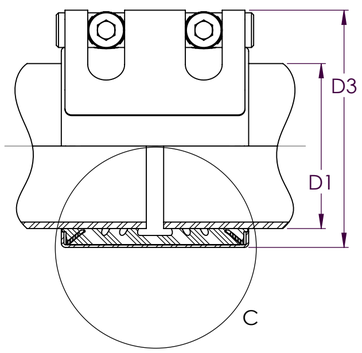

85 WIDE

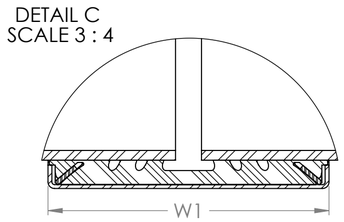

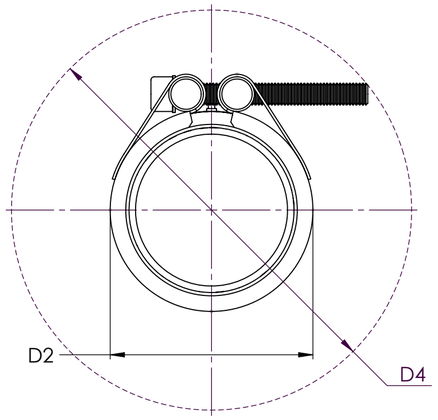

110 WIDE

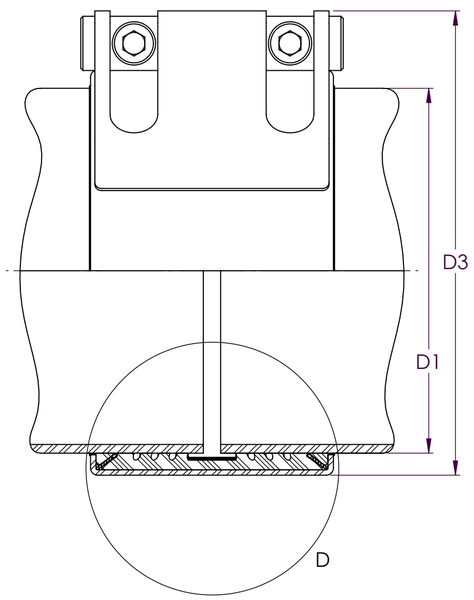

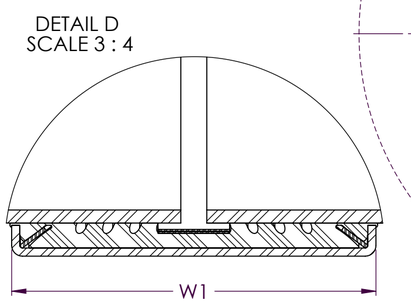

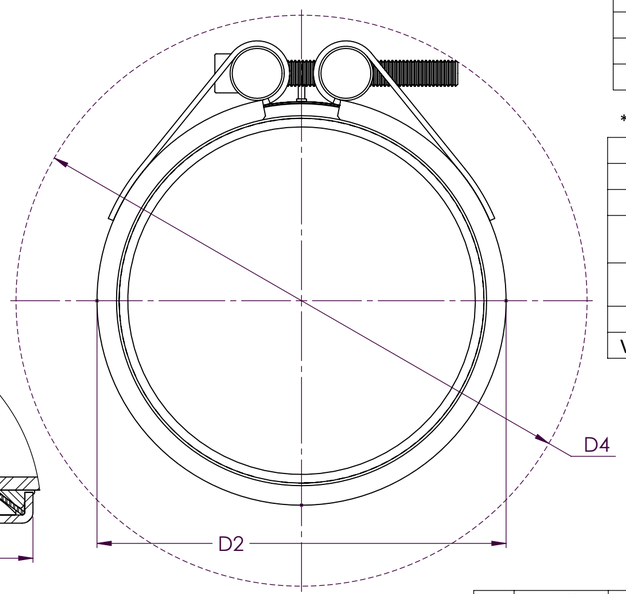

D1	O.D. TOLERANCE	Working Pressure		W1*	D2**	D3**	D4**	Screw Size	Hex Socket Adaptor	Weight	BOX QTY
(mm)	(mm)	(bar)	(bar)	(mm)	(mm)	(mm)	(mm)		(mm)	(Kgs)	
21.3	21.0/21.6	16	42	45	34	50	77	2 x M6	5	0.15	24
26.9	26.6/27.3	16	42	45	39	56	83	2 x M6	5	0.16	24
28.0	27.7/28.4	16	42	45	40	57	84	2 x M6	5	0.16	24
30.0	29.7/30.4	16	42	45	42	59	86	2 x M6	5	0.17	24
33.7	33.3/34.1	16	42	45	46	63	90	2 x M6	5	0.17	24
35.0	34.7/35.4	16	42	45	47	64	91	2 x M6	5	0.18	12
38.0	37.0/39.0	16	42	65	55	67	130	2 x M8	6	0.42	12
42.4	41.4/43.4	16	42	65	60	71	132	2 x M8	6	0.43	12
44.5	43.5/45.5	16	42	65	62	73	134	2 x M8	6	0.45	12
48.3	47.3/49.3	16	42	65	66	77	136	2 x M8	6	0.47	12
54.0	53.0/55.0	16	42	88	71	87	138	2 x M8	6	0.72	12
57.0	56.0/58.0	16	42	88	74	90	140	2 x M8	6	0.85	12
60.3	59.0/62.0	16	42	88	78	93	143	2 x M8	6	0.87	12
63.0	62.0/65.0	16	42	88	80	96	145	2 x M8	6	0.90	12
67.0	66.0/69.0	16	42	88	84	100	147	2 x M8	6	.90	12
70.0	69.0/72.0	16	42	88	87	103	150	2 x M8	6	0.91	12
73.0	72.0/75.0	16	42	88	90	106	152	2 x M8	6	0.93	12
76.1	75.0/78.0	16	42	88	94	109	185	2 x M10	8	0.95	12
82.5	81.5/84.5	16	42	88	101	116	189	2 x M10	8	1.00	12
84.0	83.0/86.0	16	42	88	102	118	190	2 x M10	8	1.02	12
88.9	88.0/91.0	16	42	88	107	123	193	2 x M10	8	1.05	12
98.0	97.0/100.0	16	42	88	116	132	200	2 x M10	8	1.25	12
101.6	100.5/103.5	16	42	88	120	136	202	2 x M10	8	1.28	12
104.0	103.0/106.0	16	42	88	122	138	204	2 x M10	8	1.31	12
108.0	107.0/110.0	16	42	88	126	142	207	2 x M10	8	1.35	12
110.0	109.0/112.0	16	42	88	128	144	208	2 x M10	8	1.41	12
114.3	113.0/116.0	16	42	89	133	149	211	2 x M10	8	1.50	12
118.0	117.0/120.0	16	42	89	137	154	214	2 x M10	8	1.58	5
127.0	126.0/129.0	16	42	89	146	163	221	2 x M10	8	1.75	5
129.0	128.0/131.0	16	42	89	148	165	223	2 x M10	8	1.85	5
133.0	132.0/135.0	16	42	114	152	177	236	2 x M12	10	2.46	5
139.7	139.0/142.0	16	42	114	159	184	241	2 x M12	10	2.65	5
141.3	140.5/143.5	13	34	115	162	187	243	2 x M12	10	2.80	5
144.0	143.0/146.0	13	34	115	164	190	245	2 x M12	10	2.90	4
154.0	153.0/156.0	13	34	115	174	200	253	2 x M12	10	3.05	4
159.0	158.0/161.0	13	34	115	179	205	257	2 x M12	10	3.15	4
165.0	164.0/167.0	13	34	115	185	211	262	2 x M12	10	3.25	4
168.3	167.0/170.0	13	34	115	189	214	265	2 x M12	10	3.40	4
170.0	169.0/172.0	13	34	115	190	216	266	2 x M12	10	3.41	4

* NOMINAL DIMENSION
** CALCULATED INSTALLED DIMENSION

MATERIALS OF MANUFACTURE			
COMPONENTS	TYPE I	TYPE II	TYPE IV
CASINGS	AISI 304 / DIN 1.4301	AISI 304 / DIN 1.4301	AISI 316L / DIN 1.4404
GASKET	EPDM/NBR/HNBR/FKM/VMQ	EPDM/NBR/HNBR/FKM/VMQ	EPDM/NBR/HNBR/FKM/VMQ
LOCK PARTS	ALLOY STEEL,EXCELLUBE B300	AISI 316/316L; DIN 1.4401/1.4404	AISI 316/316L; DIN 1.4401/1.4404
FASTENERS	12.9 EXCELLUBE B300	A4-80 EXCELLUBE G10	A4-80 EXCELLUBE G10
VACUUM INSERT	AISI 316L / DIN 1.4404	AISI 316L / DIN 1.4404	AISI 316L / DIN 1.4404

TEMPERATURE: EPDM -40 °C to +100 °C, NBR -20 to +80 °C, HNBR -20 °C to +130 °C, FKM -20 °C to +180 °C, VMQ -70 °C to +200 °C (WATER) / -70 °C to +180 °C (STEAM)

www.teekaycouplings.com

REV.	DATE	DESCRIPTION	AUTH.
1	11/12/2019	UPDATED MATERIALS TABLE	R. AIREY

REVISIONS TABLE

NOTES:
1. ALL RUBBER GASKET PROFILES SHOWN COMPRESSED.

PROJECTION: 3rd ANGLE
DO NOT SCALE
ALL DIMENSIONS IN mm UNLESS STATED OTHERWISE

	NAME	DATE
DRAWN	D.E.J. TEALE	28.04.14
CHK'D	T. REEVE	28.04.14

MATERIAL SPEC: NOT APPLICABLE
FINISH SPEC: NOT APPLICABLE

TEEKAY the pipe coupling

TAYLOR KERR ENGINEERING LTD.
6 ALSTON DRIVE, BRADWELL ABBEY, MILTON KEYNES, MK13 9HA
TEL: +44 (0)1494 679500; FAX: +44 (0)1494 679505
www.teekaycouplings.com

TITLE: GENERAL ARRANGEMENT TEEKAY AXILOCK- S COUPLINGS.

SCALE: 1/1 | DRAWING/PART No: 871 | ISSUE: 1

PROJECT REF. No: N/A | PROJECT DWG. No: N/A

CONFIDENTIAL & IN CONFIDENCE
COPYRIGHT: THIS DOCUMENT MAY NOT BE REPRODUCED, STORED OR TRANSMITTED BY ANY MEANS, WITHOUT THE WRITTEN CONSENTOF THE TAYLOR KERR GROUP.

SIZE: A2 | SHEET: 1 of 1