Risbe so last družbe Hidria-Rotomatika d.o.o. in predstavljajo poslovno skrivnost in so avtorsko delo.
Vse pravice iz patentov, blagovnih znamk in modelov povezanih z risbami pripadajo družbi Hidria Rotomatika d.o.o..
Vsak prenos tretjim osebam brez pisnega dovoljenja družbe Hidria Rotomatika d.o.o. je strogo prepovedan.

All drawings, regardless of form, are owned by Hidria Rotomatika d.o.o. and are strictly confidential and present copyrights. Intellectual Property Rights as follows rights under the laws of patents, petty patents, design patents and registered designs, copyrights, trade secret rights, and similar exclusive rights in industrial property connected with the drawings are reserved by Hidria Rotomatika d.o.o. Disclosure to any third patry is strictly forbidden.

ZAUPNO / CONFIDENTIAL

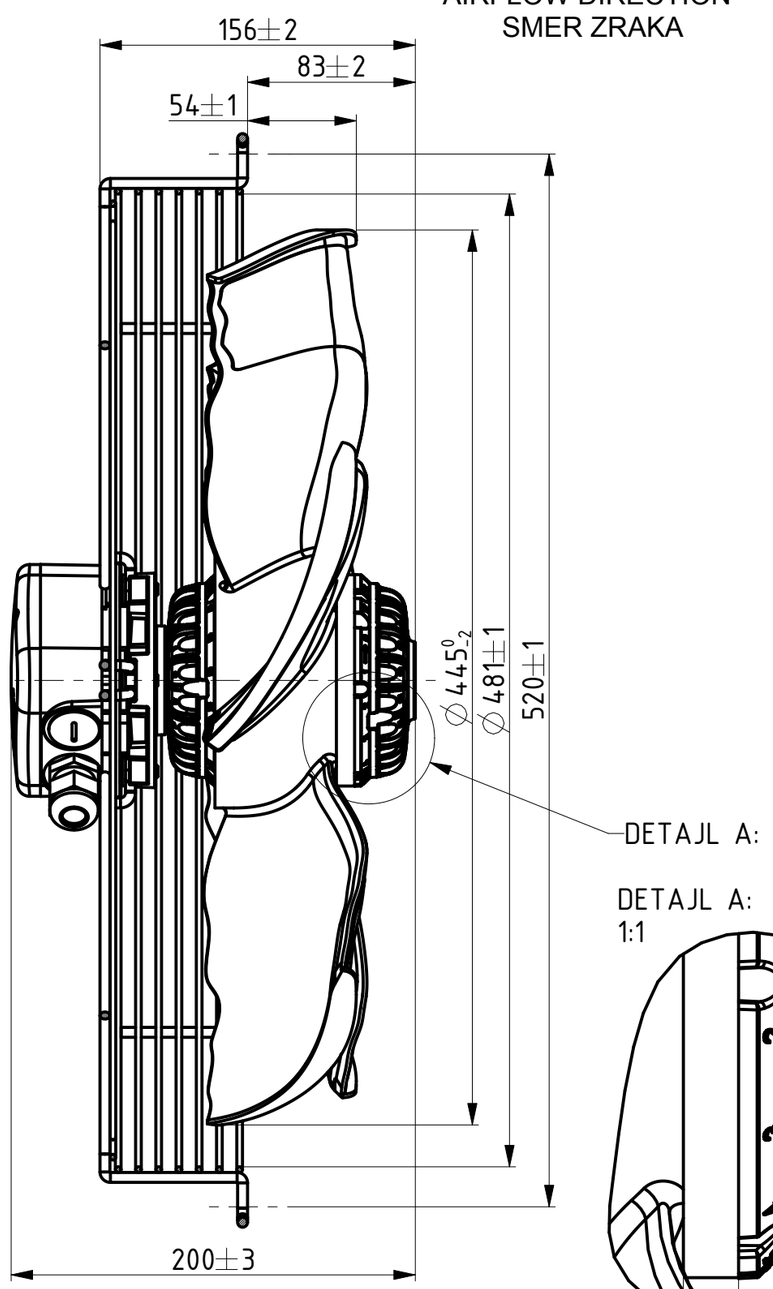

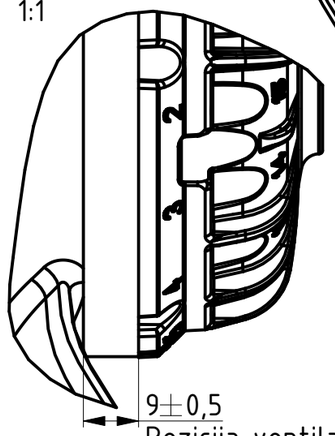

Pozicija ventilatorja
Position of fan

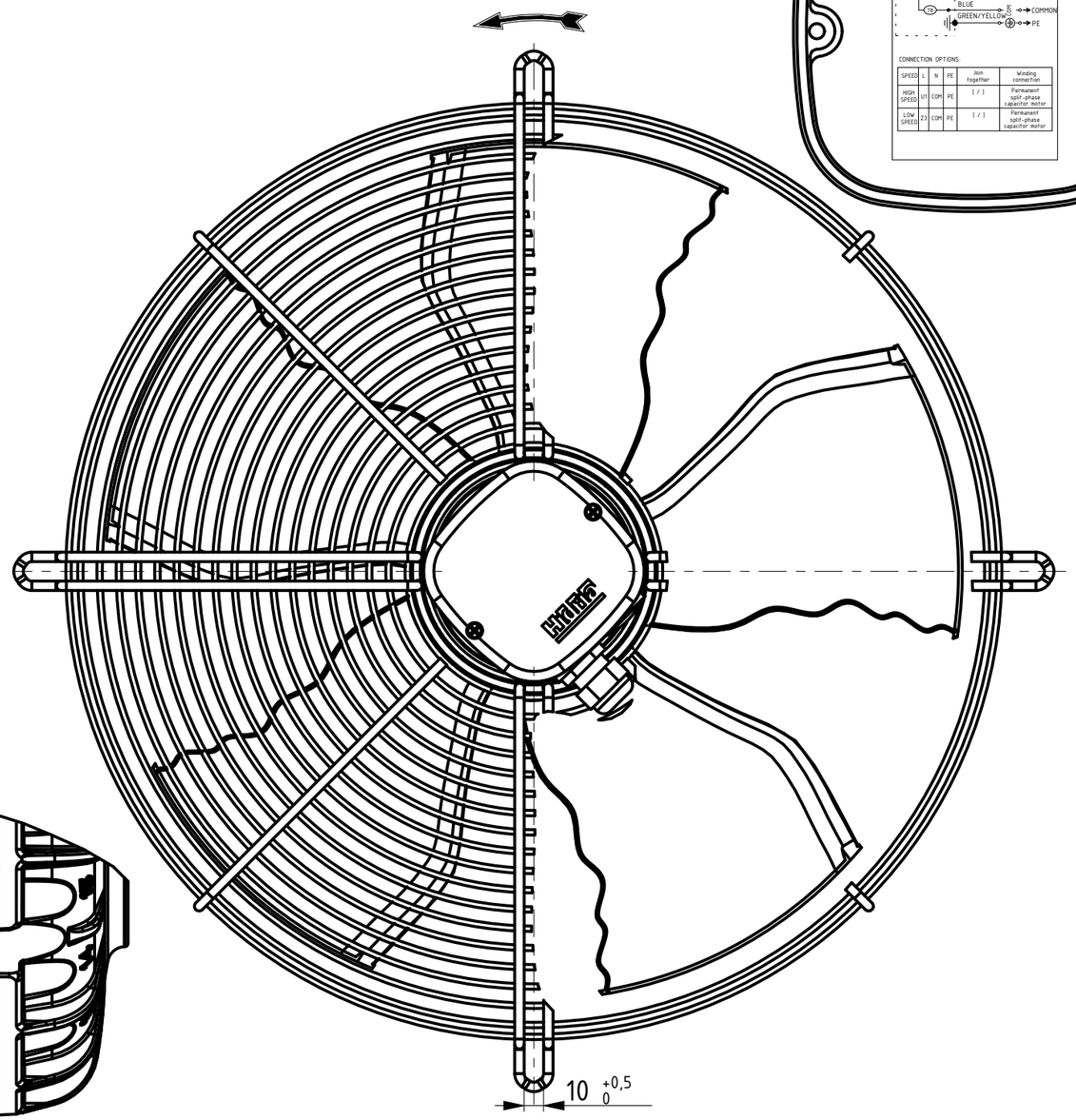

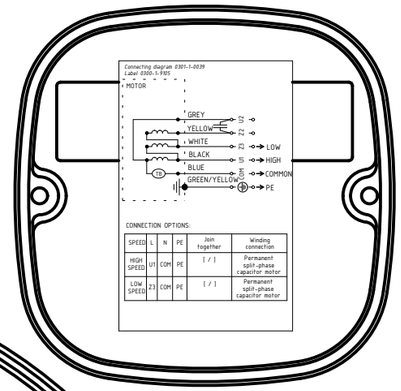

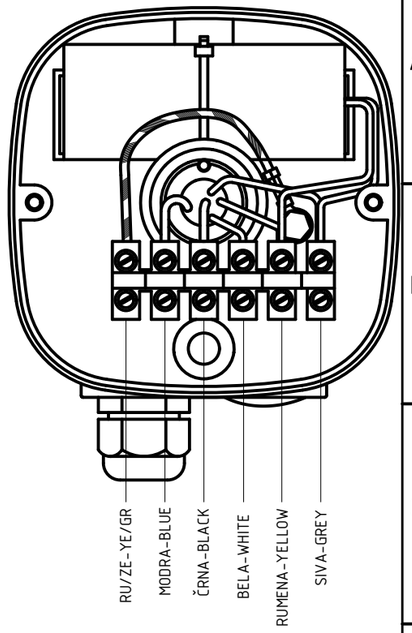

Connecting diagram 0301-1-0039
Label 0300-1-9105

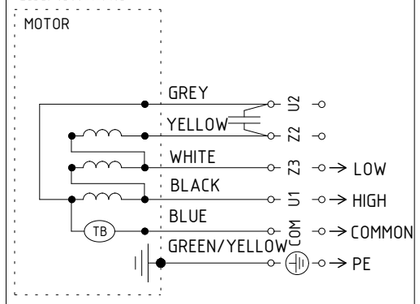

CONNECTION OPTIONS:

SPEED	L	N	PE	Join together	Winding connection
HIGH SPEED	U1	COM	PE	[/]	Permanent split-phase capacitor motor
LOW SPEED	Z3	COM	PE	[/]	Permanent split-phase capacitor motor

Navodila za kontrolo ventilatorja 0301-1-4727
Checking instruction for fan 0301-1-4727

Hidria MADE IN SLOVENIA CE DATE
R11R-45SPS-6M2-5123 0311-4-0454
1~230V 50Hz 105/95W 0.45/0.40A 760/640RPM
MAX.AMB.70° C IP54 INS.CL.155 C=3,15μF/450V
TH.PROT. ROT.

Št.spremembe: Change nbr.:	Verzija: Revision:	Opis spremembe: Description of change:	Datum: Date:	Izdelal: Produced:
1	AA	1. izdaja; Risba v Windchillu je skladna z risbo v arhivu.	26.08.13	Jure L.

MERILO/FORMAT: 33:100 / A3
PDM VERZIJA / PDM VERSION: AA.1
NETOLERIRANE MERE / UNTOLERANCED DIM.: ISO 2768-m
POVRSINSKA OBD. / SURFACE TEXTURE:
MATERIAL:

Potrjeno/Approved

	DATUM	PODPIS
RISAL	26.08.13	Uroš K.
PROJEKTIRAL	26.08.13	Jure L.

NAZIV: TITLE:
VENTILATOR R11R-45SPS-6M2-5123

KODA: CODE: 0311-4-0454
0311-4-0454

VERZIJA ARTIKLA: REVISION ARTICLE: AA

LIST: SHEET: 1
OD: OF: 1