ARI-ZESA® - Fig. 012 - Free of maintenance butterfly valve with elongated eyelets - soft sealed
ARI-GESA® - Fig. 013 - Free of maintenance butterfly valve with threaded eyelets - soft sealed

ARI-ZESA® / ARI-GESA®
with notch lever

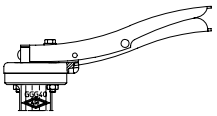

page 6

ARI-ZESA® / ARI-GESA®
with worm gear
- With variable adjustment
- Self-locking

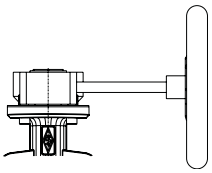

page 6

ARI-ZESA® / ARI-GESA®
with gear and chain wheel
- With variable adjustment
- Self-locking
- With variable length of chain

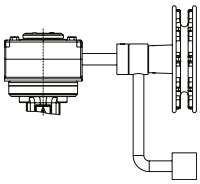

page 6

ARI-ZESA® / ARI-GESA®
with electric rotary actuator ARI-OM
- For short time duty S 2-5 min.
  (Periodic duty S3 30% ED)
- 230 V 50 Hz, 24 V DC, 24 V 50 Hz
- Enclosure IP67

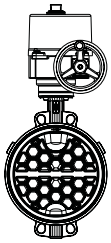

page 7

ARI-ZESA® / ARI-GESA®
with electric rotary actuator Deufra
- Type of operation, on/off S4 30% (or control S4 50%)
- 230 V 50 Hz (400 V 50 Hz)
- Enclosure IP67

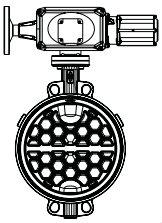

Seite 8

ARI-ZESA® / ARI-GESA®
with electric rotary actuator Auma
- For short time duty S 2-15 min. (or control S4 25%)
- 400 V 50 Hz (230 V 50 Hz)
- Enclosure IP68

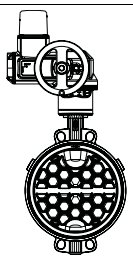

page 9

ARI-ZESA® / ARI-GESA®
with pneumatic rotary actuator AIR-TORQUE / VT
- Function: Double acting
- Function: Single acting, Spring closes on air failure (opens)
- Actuating pressure 6 bar (=0.6 MPa)

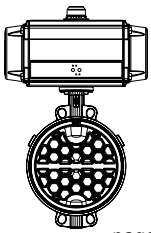

page 10 / 11

ARI-ZESA® / ARI-GESA®
with integrated Thermo - Appliance
- Cold (-20 up to +40 °C) or warm (0 up to +120 °C)
- With Lever
- Precision class 1.0

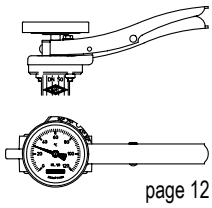

page 12

Fig. 012 - ARI-ZESA®

Fig. 013 - ARI-GESA®

DN 25-DN 50
SINGLE SHAFT

DN 65-DN 200
CURVED

DN 250-DN 600
HEXO

Features:
- Soft sealing
- Maintenance-free
- Good flow characteristic due to excellent Zeta-values
- Seat materials EPDM / NBR / FPM
- Double sealing of the stem
- Stainless steel disc
- Dew point barrier
- Centrical disc bearing
- Nodular iron body
- High quality two-component coating
- Spindle blow out protection
- Changeable lining, body detacheable
- Shaft / Disc connection not in contact with the medium
- Slip on flange DIN EN 1092-1
- EPDM with DIN DVGW Reg. drinking water

ARI-ZESA®:
- Wafer type

ARI-GESA®:
- Lug type
- Pipeline one-side detachable

Butterfly valve with elongated eyelets (SG iron)

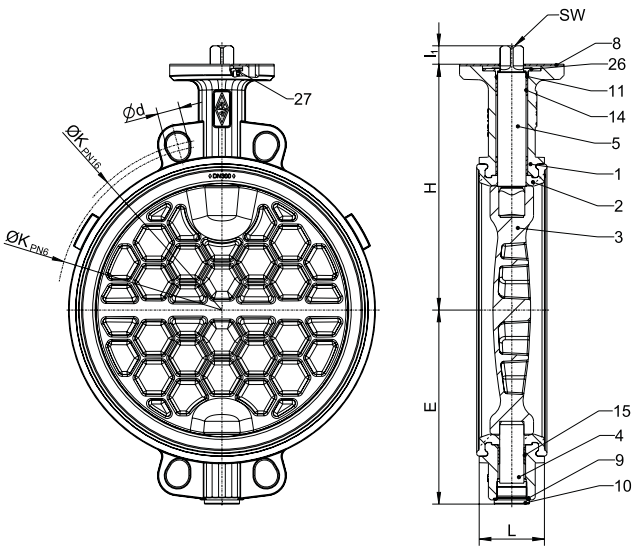

Constructions

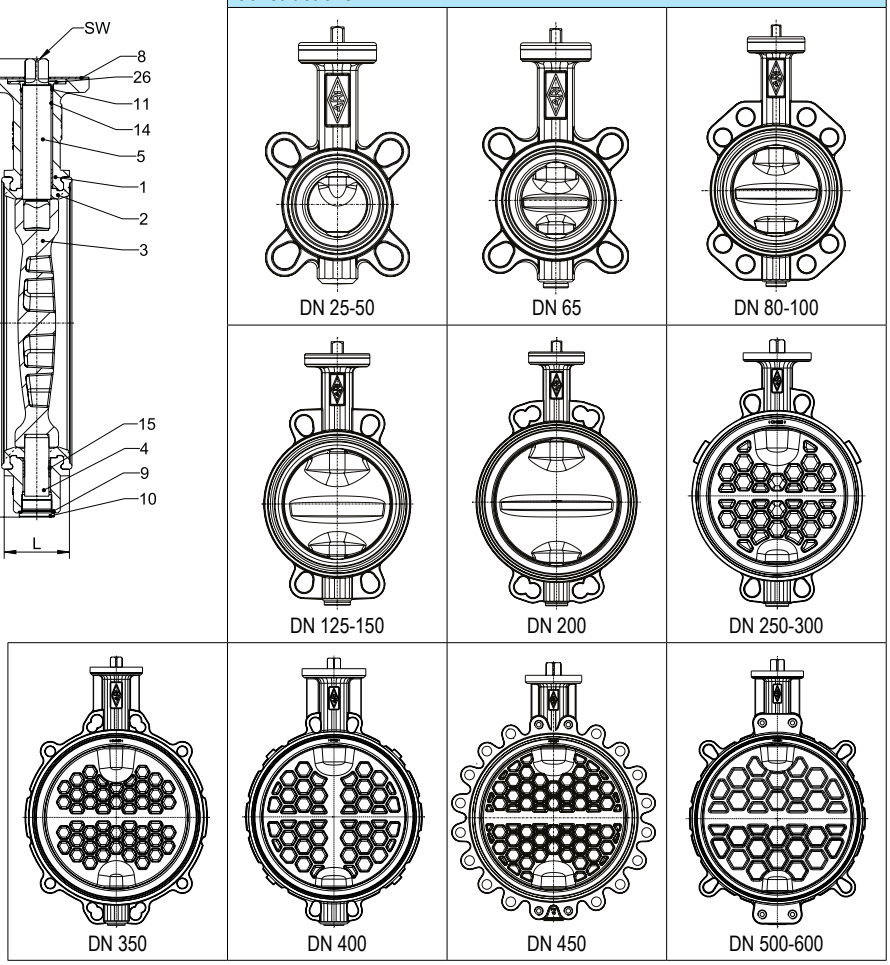

Figure	Nominal pressure	Material	Nominal diameter	Disc	Stem
20.012 (included in 22.012)	PN 6	EN-JS1030 / 5.3106	DN 25-600	1.4581	1.4021+QT (optional: ≤ DN 300 1.4571 / ≥ DN 350 1.4542)
21.012 (included in 22.012)	PN 10	EN-JS1030 / 5.3106	DN 25-600		
22.012	PN 16	EN-JS1030 / 5.3106	DN 25-600		

Seat:	
• EPDM	-10 °C to +130 °C
• NBR	-10 °C to +80 °C
• FPM	0 °C to +150 °C (not for hot water useable)

Actuation arrangement:	(refer to page 6-11)
• Notch lever • Worm gear • Gear with chain wheel	• Electric actuator (ARI-OM, Deufra, Auma) • Pneumatic actuator (AIR-TORQUE, VT)

Max. differential pressure:	
• 16 bar	DN 25-150
• 10 bar	DN 200-600

Test:	
Sealing leakage test:	• DIN EN 12266-1 Leakage rate A (DIN 3230 T3 Leakage rate 1)
DVGW-Registration:	• EPDM for drinking water acc. to DIN EN 1074-1/-2

Parts

Pos.	Sp.p.	Description	Fig. 20. / 21. / 22.012
1		Body	EN-JS1030 / 5.3106 (optional: EN-JS1049 / 5.3103 on request)
2	x	Seat	EPDM 73 / NBR 73 / FPM 73
3		Disc	1.4581 (optional: DN 40-500 CC333G - disc with different design)
4		Pivot	1.4021+QT (optional: ≤ DN 300 / 1.4571 / ≥ DN 350 1.4542)
5		Stem	1.4021+QT (optional: ≤ DN 300 / 1.4571 / ≥ DN 350 1.4542)
8	x	Insulating cap / Condensate plate	PA6 (Insulating cap DN 25-200) / Novapress 850 (Condensate plate DN 250-600)
9	x	Gasket	CU
10	x	Hexagon head screw plug	5.8-A2B
11	x	O-ring	EPDM 73 / NBR 73 / FPM 73
14 / 15		Parallel bushing	P1
26	x	Stem retaining washer	DN 25-200: Iglidur® J260 (1.4021+Q or 1.4571 on request) / DN 250-600: 1.4021+Q (1.4571 on request)
27	x	Countersunk screw	8.8-A2B
	└ Spare parts		

Information / restriction of technical rules need to be observed!

Operating and installation instructions can be downloaded at www.ari-armaturen.com.

The engineer, designing a system or a plant, is responsible for the selection of the correct valve.

Resistance and fitness must be verified (contact manufacturer for information, refer to Product overview and Resistance list).

DN			25 [1]	32 [1]	40	50	65	80	100	125	150	200	250	300	350	400	450		500		600	
Face-to-face dimension FTF series 20 acc. to DIN EN 558-1																						
L		(mm)	33	33	33	43	46	46	52	56	56	60	68	78	78	102	114		127		154	
Dimensions																						
H		(mm)	123	123	129	135	145	153	174	192	208	242	265	294	360	409	444		497		557	
E		(mm)	58	58	66	69	81	100	109	124	140	167	203	232	257	298	319		356		418	
l_1		(mm)	13	13	13	13	13	13	13	17	17	17	22	22	22	27	37		36		46	
SW		(mm)	11	11	11	11	11	11	11	17	17	17	22	22	22	27	36		36		46	
Standard-flange dimensions / Hexagon screw (Quantity, Thread, Length)																						
PN6	ØK	(mm)	75	90	100	110	130	150	170	200	225	280	335	395	445	495	--		600		705	
	n x Ød1	(mm)	4x11	4x14	4x14	4x14	4x14	4x18	4x18	8x18	8x18	8x18	4x18	4x22	4x22	4x22	--		4x22		4x26	
	Screws	(pcs.)	4	4	4	4	4	4	4	8	8	8	12	12	12	16	--		16	8	16	8
	Thread		M10	M12	M12	M12	M12	M16	M16	M16	M16	M16	M16	M20	M20	M20	--		M20	M20	M24	M24
	Length [2]	(mm)	80	80	80	90	90	100	110	120	120	130	140	160	160	180	--		220	50	250	70
PN10	ØK	(mm)	85	100	110	125	145	160	180	210	240	295	350	400	460	515	565		620		725	
	n x Ød1	(mm)	4x18	4x18	4x18	4x18	4x18	4x18	4x18	8x18	8x22	8x22	4x22	4x22	4x22	4x28	4x28		4x28		4x36	
	Screws	(pcs.)	4	4	4	4	4	8	8	8	8	8	12	12	16	16	16	8	16	8	16	8
	Thread		M12	M16	M16	M16	M16	M16	M16	M16	M20	M20	M20	M20	M20	M24	M24	M24	M24	M24	M27	M27
	Length [2]	(mm)	90	90	90	100	110	110	120	130	130	140	150	160	160	200	200	70	220	50	260	70
PN16	ØK	(mm)	85	100	110	125	145	160	180	210	240	295	355	410	470	525	585		650		770	
	n x Ød1	(mm)	4x14	4x18	4x18	4x18	4x18	4x18	4x18	8x18	8x22	8x22	4x26	4x26	4x26	4x30	4x30		4x33		4x36	
	Screws	(pcs.)	4	4	4	4	4	8	8	8	8	12	12	12	16	16	16	8	16	8	16	8
	Thread		M12	M16	M16	M16	M16	M16	M16	M16	M20	M20	M24	M24	M25	M27	M27	M27	M30	M30	M33	M33
	Length [2]	(mm)	90	90	90	100	110	110	120	130	130	140	160	170	180	220	220	75	260	70	320	90
Weights																						
Fig. 20./21./22.012		(kg)	1.4	1.4	1.7	2.3	3	3.6	4.6	7.7	8.9	12.5	20.6	29.2	42.7	65.3	124		110		195	

[1] Can be clamped between flanges PN 16 / DN 20

[2] The actual screw length required depends on the installation components used on site. Screw lengths must be checked by the customer before ordering.

Mounting variations

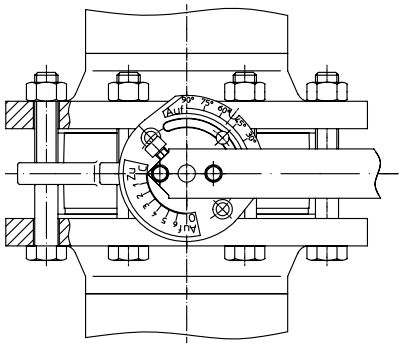

Welding neck flanges
PN 6 / PN 10 / PN 16
DIN EN 1092-1 / 11 / B1

Hexagon screw
DIN EN ISO 4016 W.-No. 4.6

Hexagon nut
DIN EN ISO 4034 W.-No. 5

ZESA® -Wafer-type-valve

Pressure-temperature-ratings	Intermediate values for max. permissible operational pressures can be determined by linear interpolation of the given temperature / pressure chart.

acc. to DIN EN 1092-2	PN		-20°C to -10°C	-10°C to 120°C	130°C	150°C
EN-JS1030 / 5.3106	16	(bar)	-	16	15,8	15,5
EN-JS1049 / 5.3103	16	(bar)	16	16	15,8	15,5

Butterfly valve with threaded eyelets (SG iron)

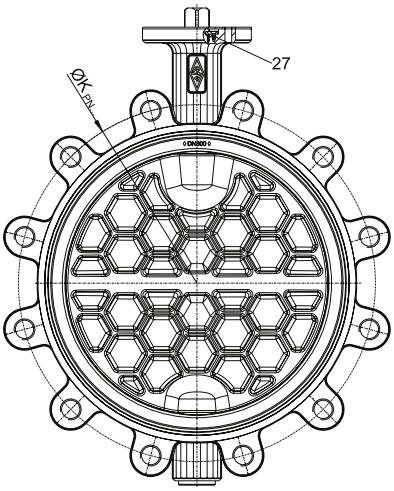

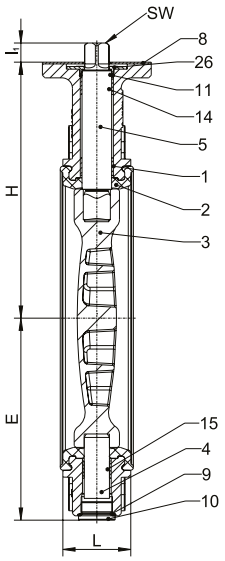

Constructions

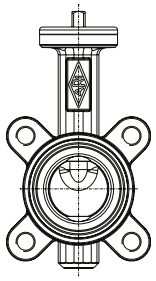
DN 25-50

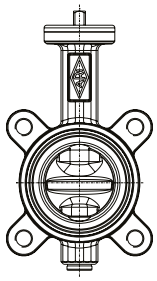
DN 65

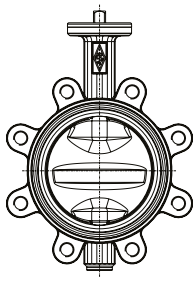
DN 80-150

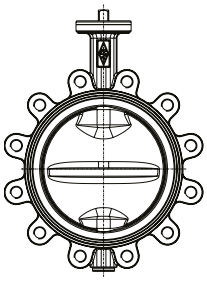
DN 200

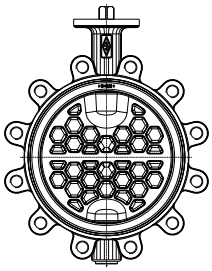
DN 250-300

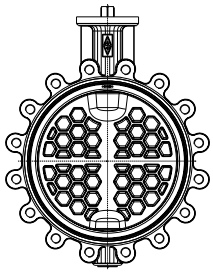
DN 350-400

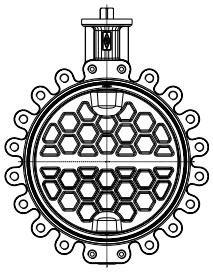
DN 450-600

Figure	Nominal pressure	Material	Nominal diameter	Disc	Stem
21.013	PN 10	EN-JS1030 / 5.3106	DN 25-600	1.4581	1.4021+QT (optional: ≤ DN 300 1.4571 / ≥ DN 350 1.4542)
22.013	PN 16	EN-JS1030 / 5.3106	DN 25-600		

Seat:	
• EPDM	-10 °C to +130 °C
• NBR	-10 °C to +80 °C
• FPM	0 °C to +150 °C (ot for hot water useable)

Actuation arrangement:	(refer to page 6-11)
• Notch lever • Worm gear • Gear with chain wheel	• Electric actuator (ARI-OM, Deufra, Auma) • Pneumatic actuator (AIR-TORQUE, VT)

Max. differential pressure:	
• 16 bar	DN 25-150
• 10 bar	DN 200-600

Test:	
Sealing leakage test:	• DIN EN 12266-1 Leakage rate A (DIN 3230 T3 Leakage rate 1)
DVGW-Registration:	• EPDM for drinking water acc. to DIN EN 1074-1/-2

Parts

Pos.	Sp.p.	Description	Fig. 21. / 22.013
1		Body	EN-JS1030 / 5.3106 (optional: EN-JS1049 / 5.3103 on request)
2	x	Seat	EPDM 73 / NBR 73 / FPM 73
3		Disc	1.4581 (optional: DN 40-500 CC333G - disc with different design)
4		Pivot	1.4021+QT (optional: ≤ DN 300 / 1.4571 / ≥ DN 350 1.4542)
5		Stem	1.4021+QT (optional: ≤ DN 300 / 1.4571 / ≥ DN 350 1.4542)
8	x	Insulating cap / Condensate plate	PA6 (Insulating cap DN 25-200) / Novapress 850 (Condensate plate DN 250-600)
9	x	Gasket	CU
10	x	Hexagon head srew plug	5.8-A2B
11	x	o-ring	EPDM 73 / NBR 73 / FPM 73
14 / 15		Parallel bushing	P1
26	x	Stem retaining washer	DN 25-200: Iglidur® J260 (1.4021+Q or 1.4571 on request) / DN 250-600: 1.4021+Q (1.4571 on request)
27	x	Countersunk screw	8.8-A2B
	└ Spare parts		

Information / restriction of technical rules need to be observed!
Operating and installation instructions can be downloaded at www.ari-armaturen.com.
The engineer, designing a system or a plant, is responsible for the selection of the correct valve.
Resistance and fitness must be verified (contact manufacturer for information, refer to Product overview and Resistance list).

DN			25	32	40	50	65	80	100	125	150	200	250	300	350	400	450	500	600
Face-to-face dimension FTF series 20 acc. to DIN EN 558-1																			
L		(mm)	33	33	33	43	46	46	52	56	56	60	68	78	78	102	114	127	154
Dimensions																			
H		(mm)	123	123	129	135	145	153	174	192	208	242	265	294	360	409	444	497	557
E		(mm)	58	58	66	69	81	100	109	124	140	167	203	232	257	298	319	356	418
l_1		(mm)	13	13	13	13	13	13	13	17	17	17	22	22	22	27	37	36	46
SW		(mm)	11	11	11	11	11	11	11	17	17	17	22	22	22	27	36	36	46
Standard-flange dimensions / Hexagon screw (Quantity, Thread, Length)																			
PN 10	ØK	(mm)	85	100	110	125	145	160	180	210	240	295	350	400	460	515	565	620	725
	n x M	(mm)	4xM12	4xM16				8xM16			8xM20		12xM20		16xM20	16xM24	20xM24	20xM24	20xM27
	Screws	(pcs.)	8	8	8	8	8	16	16	16	16	16	24	24	32	32	32 / 8	32 / 8	32 / 8
	Thread		M12	M16				M16			M20		M20		M20	M24	M24	M24	M27
	Length [1]	(mm)	30	30	30	35	35	40	40	45	45	50	55	55	60	70	80 / 70	85 / 50	100 / 70
PN 16	ØK	(mm)	85	100	110	125	145	160	180	210	240	295	355	410	470	525	585	650	770
	n x Ød1	(mm)	4xM12	4xM16				8xM16			8xM20	12xM20	12xM24		16xM24	16xM27	20xM27	20xM30	20xM33
	Screws	(pcs.)	8	8	8	8	8	16	16	16	16	24	24	24	32	32	32 / 8	32 / 8	32 / 8
	Thread		M12	M16				M16			M20		M24		M24	M27	M27	M30	M33
	Length [1]	(mm)	30	30	30	35	35	40	40	45	45	50	55	60	60	75	85 / 75	100 / 70	120 / 90
Weights																			
Fig. 21./22.013		(kg)	1.9	1.9	2.1	2.9	3.6	5.2	6.6	10	11.7	17	26.2	36.4	56.1	86.7	125.1	152	262

[1] The actual screw length required depends on the installation components used on site. Screw lengths must be checked by the customer before ordering.

Mounting variations

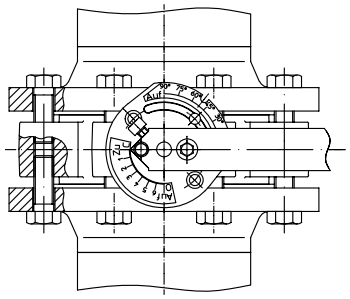

GESA®- Wafer-type-valve

Welding neck flanges
PN 10 / PN 16
DIN EN 1092-1 / 11 / B1

Hexagon screw
DIN EN ISO 4016 W.-Nr. 4.6

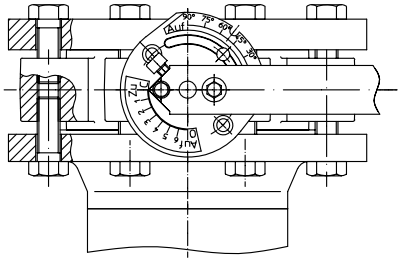

GESA®- Pipe-end-valve

Welding neck flanges
PN 10 / PN 16
DIN EN 1092-1 / 11 / B1

Hexagon screw
DIN EN ISO 4016 W.-Nr. 4.6

When used on end of line applications, a safety precaution (blind flange, etc.) is recommended.

To ensure the seat tightness, a blind or counter flange is necessary.

The installation between deviating flanges is not or only under special care possible. Please consult us.

For all installation, modification or maintenance work, please observe regulations in force and the ARI-operating instructions.

Pressure-temperature-ratings

Intermediate values for max. permissible operational pressures can be determined by linear interpolation of the given temperature / pressure chart.

acc. to DIN EN 1092-2	PN		-20°C to -10°C	-10°C to 120°C	130°C	150°C
EN-JS1030 / 5.3106	16	(bar)	-	16	15,8	15,5
EN-JS1049 / 5.3103	16	(bar)	16	16	15,8	15,5

ARI-ZESA® / ARI-GESA® with manual actuation arrangement

Notch lever

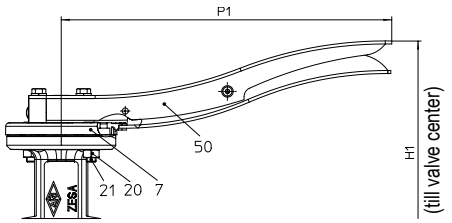

For diameters larger than DN 125 we recommend using a gear mechanism. Gear recommended for inaccessible installation (see below).

Worm gear

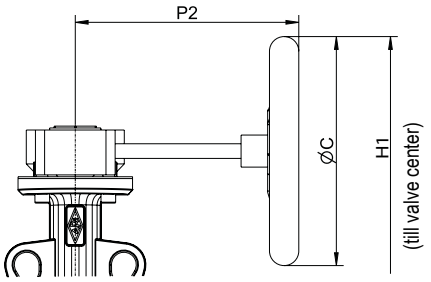

- With variable adjustment
- Self-locking

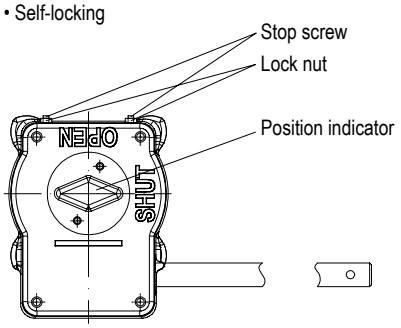

The SHUT-position can be adjusted to ±5° by a locking screw.

Gear with chain wheel

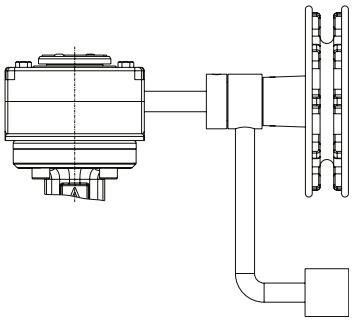

- With variable adjustment
- Self-locking
- With variable length of chain
- Dimensions and details on request

Parts			
Pos.	**Sp.p.**	**Description**	**Fig. 20. / 21. / 22.012; 21. / 22.013**
7	x	Lever cap	PA 6
8	x	Insulating cap	PA 6
20	x	Hexagon nut	5-A2B
21	x	Cheese head screw	8.8-A2B
50		Notch lever	1.0330 (surface treatment)
50		Worm gear	
	└ Spare parts		

DN			25	32	40	50	65	80	100	125	150	200	250	300	350	400	450	500	600
Dimensions																			
H1	with lever	(mm)	184	184	190	196	206	214	235	261	277	311	--	--	--	--	--	--	--
	with gear	(mm)	210	210	216	222	232	240	261	278	294	349	415	445	510	591	780	833	903
P1		(mm)	184	184	184	184	184	184	184	273	273	273	--	--	--	--	--	--	--
P2		(mm)	147	147	147	147	147	147	147	147	147	147	249	244	244	333	437	437	480
ØC		(mm)	125	125	125	125	125	125	125	125	125	125	250	250	250	300	600	600	600
Type of gear			242-10M	242-10M	242-10M	242-10M	242-10M	242-10M	242-10M	242-10M	242-10M	242-10M	242-20M	242-30S	242-30S	242-30L	242-40M	242-40M	AB1250N
Weights																			
ZESA®	with lever	(kg)	1.9	1.9	2.1	2.5	3.3	3.8	4.6	8.7	10.4	14.1	--	--	--	--	--	--	
GESA®		(kg)	2.3	2.3	2.5	3.3	4	5.6	7	10.8	12.5	16.3	--	--	--	--	--	--	
ZESA®	with gear	(kg)	2.9	2.9	3.2	3.8	4.5	5.1	6.1	9.2	10.4	14	24.1	31.2	47.7	70.9	134.7	120.7	221.8
GESA®		(kg)	3.4	3.4	3.6	4.4	5.1	6.7	8.1	11.5	13.2	18.5	29.7	41.4	61.1	92.3	135.8	162.7	288.8

Butterfly valve with electric rotary actuator

ZESA®

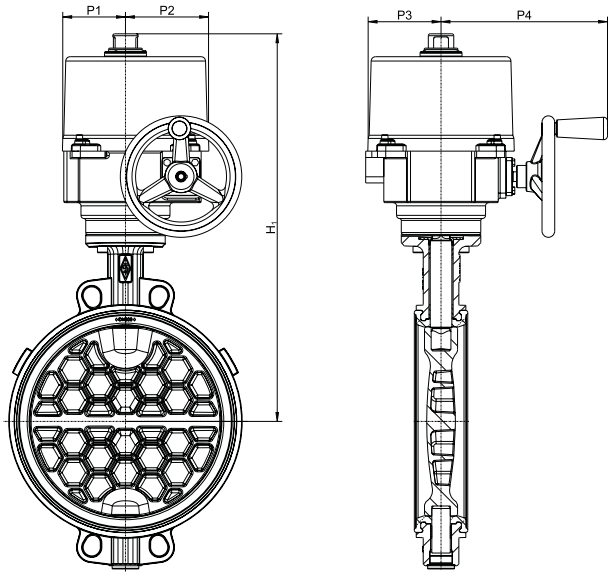

GESA®

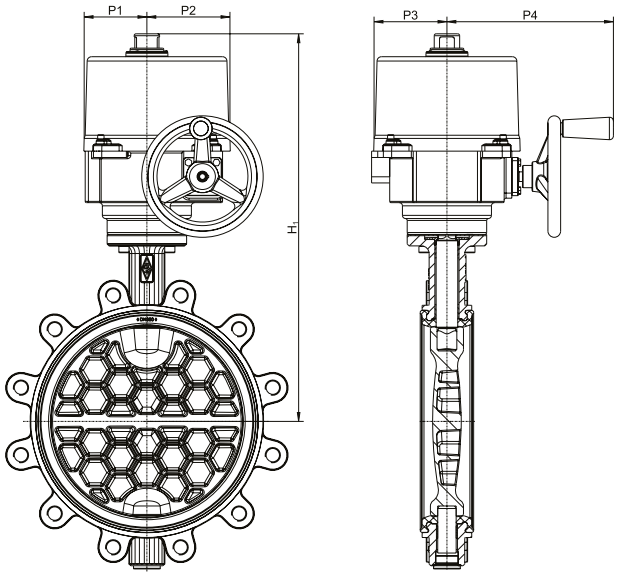

(Figures show DN 300)

Type: ARI-OM
• for short time duty S 2-5 min. (Periodic duty S3 30% duty cicle, max. 60 c/h, max. modulating torque = ca. 50% rated torque) • Enclosure IP67 • Temperature guard in the motor
Voltages:
• 230 V 50 Hz • 24 V AC/DC (Other voltages on request)
Accesssories:
• Potentiometer (1000 Ohm) • Positioner 4-20 mA • Position-transmitter 4-20 mA • Heating • Travel switch

For connection refer to terminal connection in the operating instructions of the actuator !

DN		25	32	40	50	65	80	100	125	150	200	250	300 [1]
Actuator													
Type of actuator		OM-1						OM-A	OM-2	OM-3		OM-4	
Operating time	(s)	13						24	17	26		18	
Dimensions													
H1	(mm)	273	273	279	285	295	303	374	447	463	497	585	614
P1	(mm)	35	35	35	35	35	35	54	82	82	82	94	94
P2	(mm)	80	80	80	80	80	80	54	118	118	118	126	126
P3	(mm)	54	54	54	54	54	54	54	100	100	100	110	110
P4	(mm)	54	54	54	54	54	54	54	230	230	230	262	262
Weights													
ZESA®	(kg)	3.4	3.4	3.7	4.3	5	5.6	6.6	9.2	10.4	14	24.1	34.2
GESA®	(kg)	3.9	3.9	4.1	4.9	5.6	7.2	8.6	11.5	13.2	18.5	29.7	41.4

[1] Max differential pressure against tight shut off 6 bar

Operating and installation instructions can be downloaded at www.ari-armaturen.com.

Butterfly valve with electric rotary actuator

ZESA®

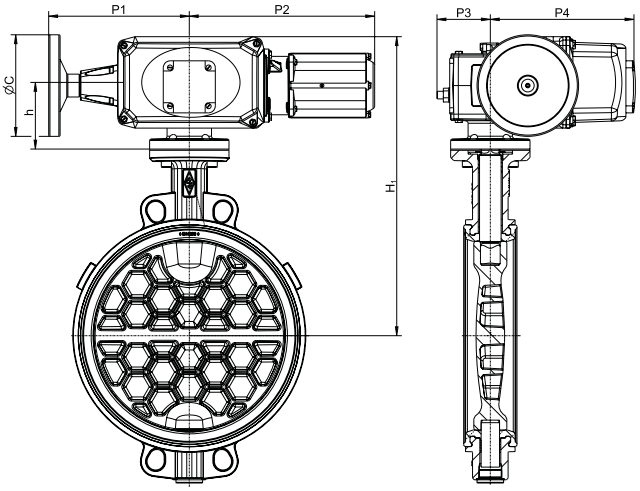

GESA®

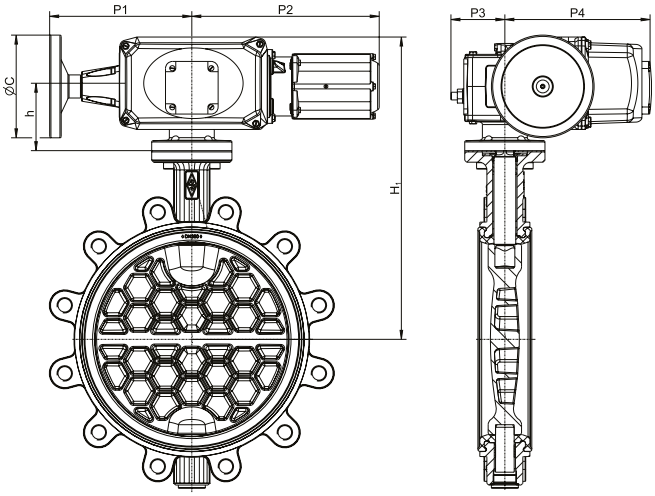

(Figures show DN 300)

Type: Deufra
• Type of operation on/off S4 30% (optional: for control S4 50%) • Enclosure IP67 • Temperature guard in the motor • Heating
Voltages:
• 230 V 50 Hz • 400 V 50 Hz (not for SQ4) Other voltages on request
Accessories:
• Travel switch • Potentiometer • Valve positioner 0-10 V / 4-20 mA • Position-transmitter
Special actuators:
• Reset to start on failure Type FQ

For connection refer to terminal connection in the operating instructions of the actuator !

DN		**25**	**32**	**40**	**50**	**65**	**80**	**100**	**125**	**150**	**200**	**250**	**300**	**350**	**400**	**450**	**500**	**600**
Actuator																		
Type of actuator		SQ4						SQ6	SQ10		SQ15	SQ25	SQ60		SQ120			SQ250
Operating time	(s)	6						6	6		15	10	30		30			70
Dimensions																		
H1	(mm)	347	347	353	359	369	377	398	416	432	466	445	519	585	620	657	708	838
h	(mm)	53	53	53	53	53	53	53	53	53	53	100	100	100	86	86	86	70
ØC	(mm)	60	60	60	60	60	60	60	60	60	100	160	250	250	250	250	250	300
P1	(mm)	90	90	90	90	90	90	90	90	90	98	167	169	169	172	172	172	475
P2	(mm)	160	160	160	160	160	160	202	202	202	260	312	340	340	392	392	392	188
P3	(mm)	65	65	65	65	65	65	65	65	65	65	89	89	89	133	133	133	130
P4	(mm)	125	125	125	125	125	125	125	125	125	125	226	226	226	284	284	284	333
Weights																		
ZESA®	(kg)	7.4	7.4	7.7	8.3	9	9.6	11.6	14.7	15.9	19.5	38.6	49.2	62.7	95.3	154	140	252
GESA®	(kg)	7.9	7.9	8.1	8.9	9.6	11.2	13.6	17	18.7	24	44.2	56.4	76.1	116.7	155.1	182	319

Operating and installation instructions can be downloaded at www.ari-armaturen.com.

Butterfly valve with electric rotary actuator

ZESA®

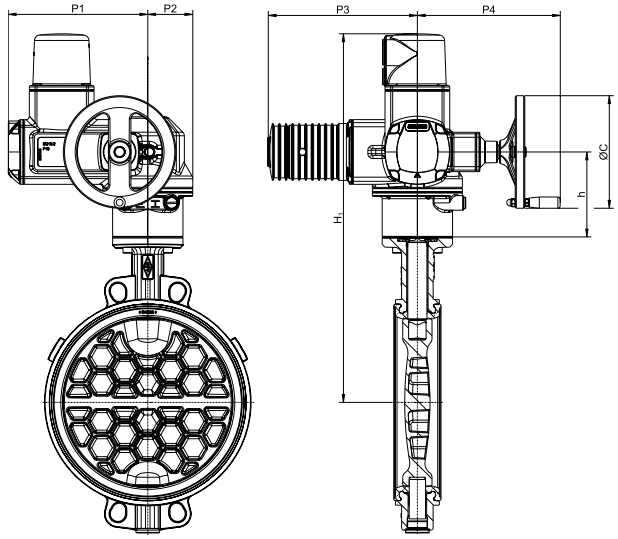

GESA®

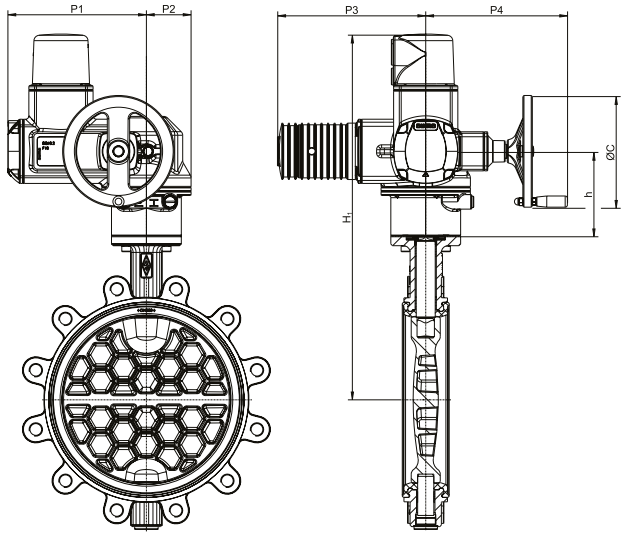

(Figures show DN 300)

Type: Auma
• For short time duty S 2-15 min. (for control S4 25%)
• Enclosure IP68
• Temperature guard in the motor
• Heating
Voltages:
• 400 V 50 Hz
• 230 V 50 Hz
(Other voltages on request)
Accessories:
• Travel switch
• Potentiometer
• Auma Matic
• Valve positioner 0-10 V / 4-20 mA
• Position-transmitter

For connection refer to terminal connection in the operating instructions of the actuator !

DN		**25**	**32**	**40**	**50**	**65**	**80**	**100**	**125**	**150**	**200**	**250**	**300**	**350**	**400**	**450**	**500**	**600**
Actuator																		
Type of actuator		SQ05.2										SQ07.2	SQ10.2		SQ12.2			SA07.6 +GS125.3
Operating time	(s)	16										16	16		22			69
Dimensions																		
H1	(mm)	467	467	473	479	489	497	518	536	552	586	635	655	821	834	871	922	869
h	(mm)	134	134	134	134	134	134	134	134	134	134	160	151	151	215	215	215	115
ØC	(mm)	160	160	160	160	160	160	160	160	160	160	160	200	200	200	200	200	160
P1	(mm)	238	238	238	238	238	238	238	238	238	238	238	248	248	248	248	248	194
P2	(mm)	62.5	62.5	62.5	62.5	62.5	62.5	62.5	62.5	62.5	62.5	62.5	80	80	105	105	105	537
P3	(mm)	265	265	265	265	265	265	265	265	265	265	265	265	265	265	265	265	139
P4	(mm)	249	249	249	249	249	249	249	249	249	249	249	254	254	254	254	254	374
Weights																		
ZESA®	(kg)	22.4	22.4	22.7	23.3	24	24.6	25.6	28.7	29.9	33.5	41.6	55.2	68.7	100.3	159	145	262
GESA®	(kg)	22.9	22.9	23.1	23.9	24.6	26.2	27.6	31	32.7	38	47.2	62.4	82.1	121.7	160.1	187	329

Operating and installation instructions can be downloaded at www.ari-armaturen.com.

Butterfly valve with pneumatic rotary actuator

ZESA®

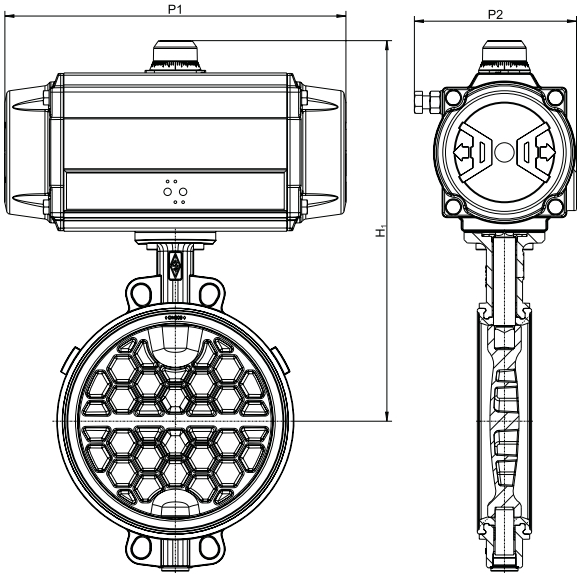

GESA®

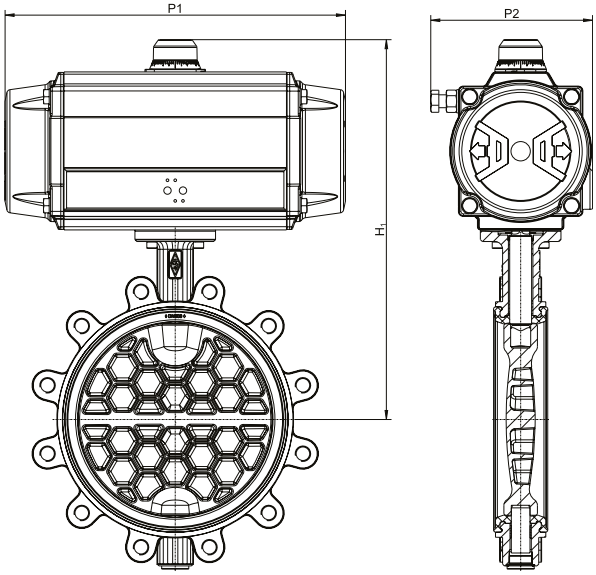

(Figures show DN 300)

Type: AIR TORQUE
• Function: double acting single acting, Spring closes on air failure (opens)
• Actuating pressure 6 bar (=0,6 MPa)
• Position indicator
Accessories:
• Limit switch open / close
• Solenoid valve: double acting: 5/2 - way / single actingt: 3/2 - way
• Exhaust silencer with throttling function (double acting)
• Speed regulating plate (single acting)
• Valve positioner
• Other actuating pressures on request

For connection refer to terminal connection in the operating instructions of the actuator !

DN			25	32	40	50	65	80	100	125	150	200	250	300	350	400	450	500	600
double acting	**Actuator**																		
	Type of actuator		DR30						DR60	DR100		DR150	DR220	DR450		DR600	DR900	DR1200	DR3000
	Dimensions																		
	H1	(mm)	228	228	234	240	250	258	296	327	343	389	450	511	569	637	715	794	937
	P1	(mm)	159	159	159	159	159	159	211	248	248	269	315	409	409	438	474	543	728
	P2	(mm)	83	83	83	83	83	83	95	106	106	123	141	172	172	187	200	222	329
	Weights																		
	ZESA®	(kg)	3	3	3.3	3.9	4.6	5.2	7.3	11.5	12.7	17.7	28.7	43.4	56.9	83.1	148.3	144.3	271.3
	GESA®	(kg)	3.5	3.5	3.7	4.5	5.2	6.8	9.3	13.8	15.5	22.2	34.3	50.6	70.3	104.5	149.4	186.3	338,3
single acting	**Actuator**																		
	Type of actuator (closed)		SC 30- 6				SC 60- 6	SC 100- 6	SC 150- 6	SC 220- 6	SC 300- 6	SC 450- 6	SC 600- 6	SC 1200- 6		SC 2000- 6	SC 2000- 6	SC 3000- 6	SC 5000-6
	Type of actuator (open)		SO 30- 5				SO 60- 5	SO 100- 5		SO 150- 5	SO 220- 5		SO 450- 5	SO 900- 5		SO 1200- 5	SO 2000- 6	SO 2000- 5	SO 4000-5
	Dimensions																		
	H1	(mm)	228	228	234	240	250	258	296	327	343	389	450	511	569	637	715	794	937
	P1	(mm)	159	159	159	159	211	248	269	315	345	409	438	543	543	621	605	684	855
	P2	(mm)	83	83	83	83	95	106	123	141	152	172	187	222	222	262	262	330	418
	Weights																		
	ZESA®	(kg)	3.3	3.3	3.6	4.2	6	8	10.6	17.1	21.3	29.6	42	72.8	86.3	134.3	193	205.5	363,5
	GESA®	(kg)	3.8	3.8	4	4.8	6.6	9.6	12.6	19.4	24.1	34.1	47.6	80	99.7	155.7	194.1	247.5	430,5

Operating and installation instructions can be downloaded at www.ari-armaturen.com.

Butterfly valve with pneumatic rotary actuator

ZESA®

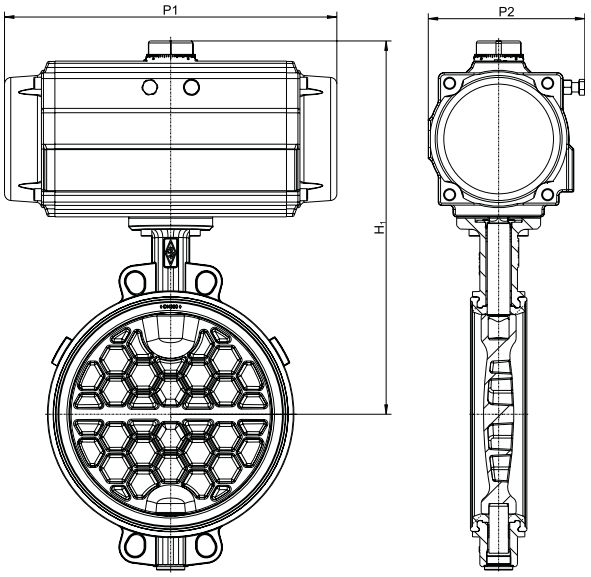

GESA®

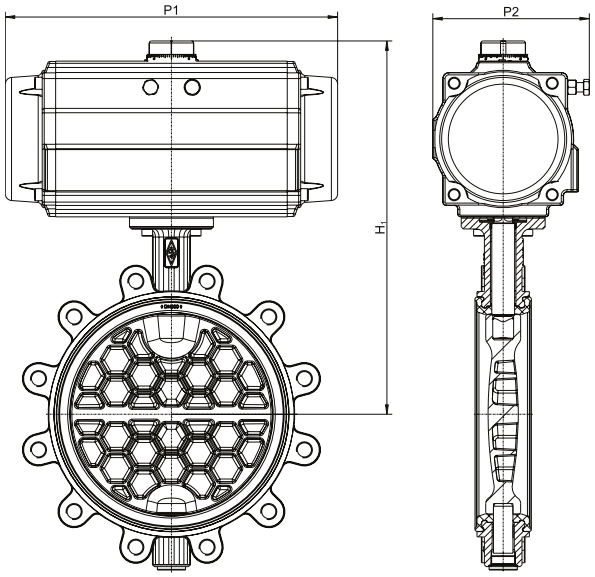

(Figures show DN 300)

Type: VT
• Function: double acting single acting, Spring closes / opens on air failure • Actuating pressure 6 bar (=0,6 MPa)
Accessories:
• Limit switch open / close • Solenoid valve: double acting: 5/2 - way / single acting: 3/2 - way • Exhaust silencer with throttling function (double acting) • Speed regulating plate (single acting) • Valve positioner • Other actuating pressures on request

For connection refer to terminal connection in the operating instructions of the actuator !

DN			25	32	40	50	65	80	100	125	150	200	250	300	350	400	450	500	600
double acting	**Actuator**																		
	Type of actuator		VT065DN						VT075DN	VT095DN		VT110DN	VT125DN	VT140DN	VT160DN	VT190DN		VT210DN	VT240DN
	Dimensions																		
	H1	(mm)	232	232	238	244	254	262	294	335	351	398	456	502	590	571	706	782	879
	P1	(mm)	189	189	189	189	189	189	210	264	264	266	337	377	414	490	490	550	602
	P2	(mm)	90	90	90	90	90	90	103	126	126	139	157	175	196	217	217	236	262
	Weights																		
	ZESA®	(kg)	3.3	3.3	3.6	4.2	4.9	5.5	7	12.7	13.9	19	30.8	44.3	64	94.6	453.3	147.7	249.2
	GESA®	(kg)	3.8	3.8	4	4.8	5.5	7.1	9	15	16.7	23.5	36.4	51.5	77.4	116	154.4	189.7	316.2
single acting spring closes	**Actuator**																		
	Type of actuator		VT065 S10N FC				VT085 S12N FC		VT095 S12N FC	VT125 S12N FC		VT140 S12N FC	VT160 S12N FC	VT210 S11N FC		VT240 S12N FC	VT270 S12N FC		VT350 S12N FC
	Dimensions																		
	H1	(mm)	232	232	238	244	277	285	317	383	399	450	495	579	645	741	805	858	997
	P1	(mm)	189	189	189	189	229	229	264	337	337	377	414	550	550	602	672	672	845
	P2	(mm)	90	90	90	90	112	112	126	157	157	175	196	236	236	262	295	295	385
	Weights																		
	ZESA®	(kg)	3.6	3.6	3.9	4.5	7	7.6	10.4	19.8	21	28.4	46.2	77.6	91.1	143.1	214.6	200.6	383.1
	GESA®	(kg)	4.1	4.1	4.3	5.1	7.6	9.2	12.4	22.1	23.8	32.9	51.8	84.8	104.5	164.5	215.7	242.6	450.1
single acting spring open	**Actuator**																		
	Type of actuator		VT065 S10N FO				VT075 S11N FO	VT085 S11N FO	VT095 S10N FO	VT125 S11N FO			VT160 S11N FO	VT190 S11N FO		VT210 S11N FO	VT240 S11N FO	VT270 S10N FO	VT350 S11N FO
	Dimensions																		
	H1	(mm)	232	232	238	244	265	285	317	283	399	433	495	556	622	694	766	858	997
	P1	(mm)	189	189	189	189	210	229	264	337	337	337	414	490	490	550	602	672	845
	P2	(mm)	90	90	90	90	103	112	126	157	157	157	196	217	217	236	262	295	385
	Weights																		
	ZESA®	(kg)	3.6	3.6	3.9	4.5	5.8	7.6	10.4	19.8	21	24.6	46.2	63	76.5	113.7	201.8	200.6	383.1
	GESA®	(kg)	4.1	4.1	4.3	5.1	6.4	9.2	12.4	22.1	23.8	29.1	51.8	70.2	89.9	135.1	202.9	242.6	450.1

Operating and installation instructions can be downloaded at www.ari-armaturen.com.

THEA® - integrated THErmo-Appliance

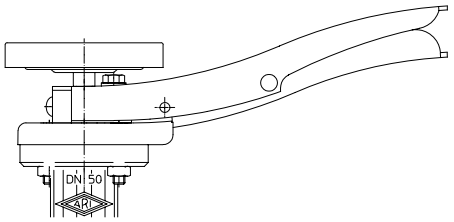

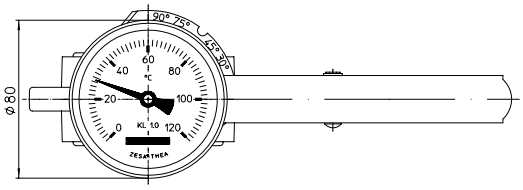

Standard thermometer ranges - cold (-20 °C to +40 °C) - warm (0 °C to +120 °C)	
Indication:	Precision class 1.0 (thermometer adjusted to ARI-THEA)
Diameter range:	DN 25 / 32 - DN 40 DN 50 - DN 80 DN 100 DN 125 - DN 200
Order data:	Thermo-Appliance with range ....., for diameter range .....

Indicator installed by insertion into the bore hole of the lever and the stem - convertible on site*

*** not possible with stem of 1.4571**

Actuator flange connection

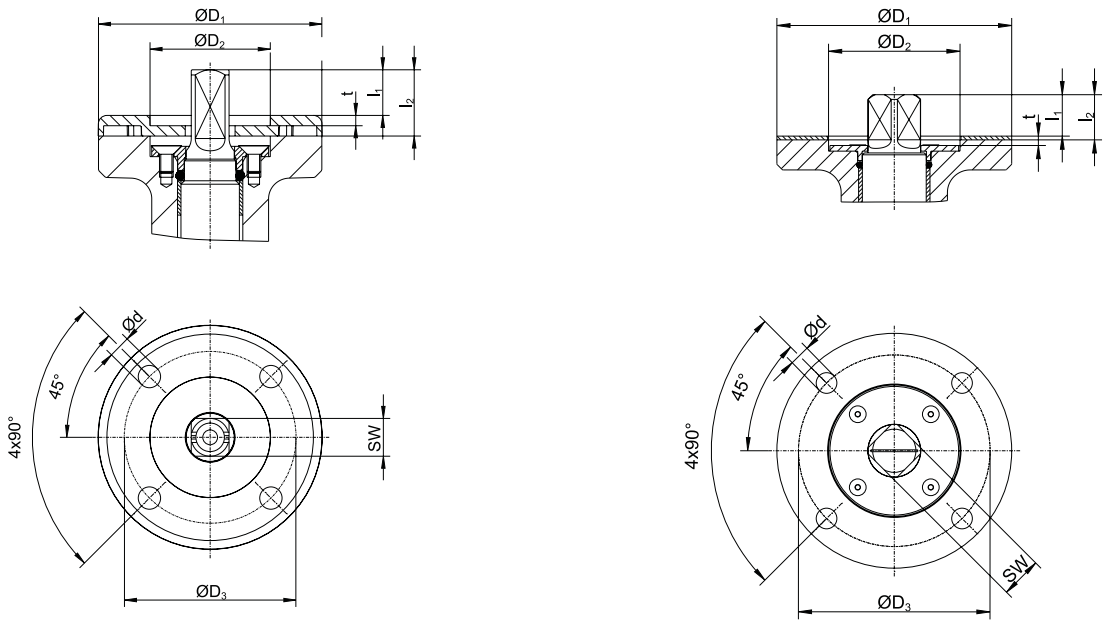

DN 25-200 **DN 250-600**

DN		25	32	40	50	65	80	100	125	150	200	250	300	350	400	450	500	600
Anschluss EN ISO 5211		F 05							F 07			F 10			F 14			F16
4-square SW (parallel)	(mm)	11							17			--			--	--		--
4-square SW (diagonal)	(mm)	--							--			22			27	36		46
Ød	(mm)	7							9			11			18			22
ØD1	(mm)	65							90			125			175			210
ØD2	(mm)	35 H10							55 H10			70			100			130
ØD3	(mm)	50							70			102			140			165
l_1	(mm)	13							17			22			27	37	36	46
l_2	(mm)	19							23			24			29	39	38	48
t	(mm)	3							3			5			6			7

Please indicate when ordering:

- Figure-No.
- Nominal pressure
- Nominal diameter
- Soft seal seat material
- Stem / disc material
- Actuation arrangement
- Special design / accessories

Please indicate in your order, if the valves are to be installed in hazardous areas (ATEX).

Example:

Figure 22.012; Nominal pressure PN 16; Nominal diameter DN 100; Seat of EPDM, Washer/Stem of 1.4581/1.4021, with notch lever and integrated Thermo-Indication (-20 to 40 °C)..

Kvs-value / Zeta-value																		
DN		**25**	**32**	**40**	**50**	**65**	**80**	**100**	**125**	**150**	**200**	**250**	**300**	**350**	**400**	**450**	**500**	**600**
Kvs-value	(m^3/h)	41	46	91	172	299	420	763	1086	1790	3280	5400	7950	10900	13400	16700	23050	32500
Zeta-value	--	0,37	0,79	0,49	0,34	0,32	0,37	0,27	0,33	0,25	0,24	0,21	0,20	0,20	0,23	0,24	0,19	0,20

Difference between disc outside-diameter and face-to-face																		
DN		**25**	**32**	**40**	**50**	**65**	**80**	**100**	**125**	**150**	**200**	**250**	**300**	**350**	**400**	**450**	**500**	**600**
B	(mm)	--	--	5	5	11	18	25	36	48	71	91	112	132	147	168	188	224
D	(mm)	--	--	26	29	49	68	88	115	142	194	243	292	333	383	436	486	580

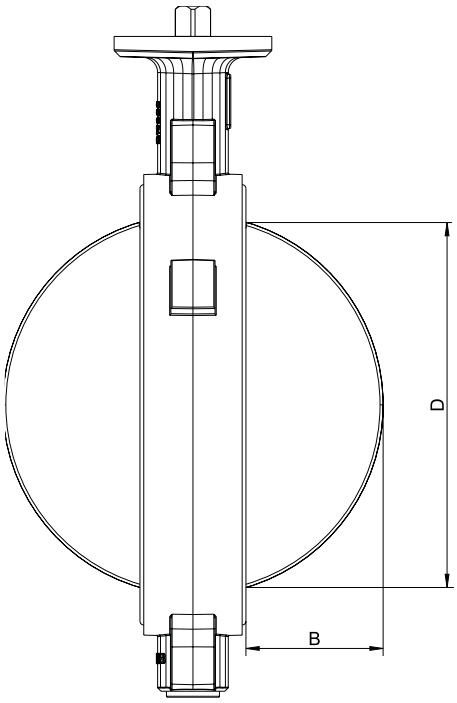

ARI-ZESA® / ARI-GESA®

Actuator selection

DN				25-50	65	80	100	125	150	200	250	300	350	400	450	500	600
Anschlussflansch EN ISO 5211				F 05				F 07			F 10			F 14			F16
4-square SW (parallel)			(mm)	11				17									
4-square SW (diagonal)			(mm)								22			27	36		46
Manual actuation	Notch lever		Size	I				II			--						
Manual actuation	Worm gear		Type	242-10M				242-10M			242-20M	242-30S		242-30L	242-40M		AB 1250N
Manual actuation	Gear with chain wheel		Type	AB210N				AB210N			242-30S			242-30L	AB1250N		AB 2000N
Electric rotary actuator	ARI-OM (230 V 50 Hz)		Type	OM-1			OM-A	OM-2	OM-3		OM-4		--				
Electric rotary actuator	Deufra (230 V 50 Hz)		Type	SQ4			SQ6	SQ10		SQ15	SQ25	SQ60		SQ120			SQ250
Electric rotary actuator	Auma (400 V 50 Hz)		Type	SQ05.2							SQ07.2	SQ10.2		SQ12.2			SA07.6 +GS 125.3
Pneumatic rotary actuator	AIR TORQUE	double acting	Type	DR30			DR60	DR100		DR150	DR220	DR450		DR600	DR900	DR1200	DR3000
Pneumatic rotary actuator	AIR TORQUE	single acting, Spring closes	Type	SC 30-6	SC 60-6	SC 100-6	SC 150-6	SC 220-6	SC 300-6	SC 450-6	SC 600-6	SC 1200-6		SC 2000-6		SC 3000-6	SC 5000-6
Pneumatic rotary actuator	AIR TORQUE	single acting, Spring opens	Type	SO 30-5	SO 60-5	SO 100-5		SO 150-5	SO 220-5		SO 450-5	SO 900-5		SO 1200-5	SO 2000-6	SO 2000-5	SC 4000-5
Pneumatic rotary actuator	VT	double acting	Type	VT065DN			VT075DN	VT095DN		VT110DN	VT125DN	VT140DN	VT160DN	VT190DN		VT210DN	VT240DN
Pneumatic rotary actuator	VT	single acting, Spring closes	Type	VT065 S10N FC	VT085 S12N FC		VT095 S12N FC	VT125 S12N FC		VT140 S12N FC	VT160 S12N FC	VT210 S11N FC		VT240 S12N FC	VT270 S12N FC		VT350 S12N FC
Pneumatic rotary actuator	VT	single acting, Spring opens	Type	VT065 S10N FO	VT075 S11N FO	VT085 S11N FO	VT095 S10N FO	VT125 S11N FO			VT160 S11N FO	VT190 S11N FO		VT210 S11N FO	VT240 S11N FO	VT270 S11N FO	VT350 S11N FO

Your valve made by ARI®
ari-armaturen.com

ARI-Armaturen Albert Richter GmbH & Co. KG, D-33750 Schloß Holte-Stukenbrock,
Tel. +49 (0)5207 / 994-0, Telefax +49 (0)5207 / 994-158 or 159 Internet: https://www.ari-armaturen.com E-mail: info.vertrieb@ari-armaturen.com