ENGINEERING
TOMORROW

Data Sheet

Hermetic receiver filter drier Type **DMC** and **DCC**

ELIMINATOR®, combined receivers and filter driers used in small hermetic refrigeration systems

DMC and DCC are combined receivers and filter driers for use in small hermetic refrigeration systems.

Under operating conditions where the condenser cannot contain the total quantity of refrigerant, a receiver might be necessary. This extra receiver capacity can be provided by using a DCC or a DMC combined receiver and filter drier.

ELIMINATOR® type DMC driers are designed for applications requiring the highest moisture capacity and acid adsorption capacity.

Available with solder (cu-plated steel) connections.

Features

The Core - Type DMC

- 100% Molecular Sieve core
- High drying capacity minimizing the risk of acid formation (hydrolysis)
- Recommended for use with HFO, HC, HFC and HCFC refrigerants
- Will not deplete oil additives

The Core - Type DCC

- 80% Molecular Sieve with 20% activated alumina
- Recommended for use with HFO, HC, HFC and HCFC refrigerants
- Perfect core blend for A/C systems that operate at high condensing temperatures and require high drying capacity

The Shell

- PED/UL approved for PS 42 bar
- Available with solder (cu-plated steel connectors)
- Corrosion resistant powder-painted finish

The Filter

- Combination of filter drier and receiver
- Available in sizes 4 – 40 cubic inches
- High drying capacity at high and low liquid temperatures
- Space-saving
- Fast installation
- 25 µm (0.001 in.) filter provides high retention with minimal pressure drop
- Thermally stable up to 120 °C

Product specification

Design

Figure 1: DMC and DCC

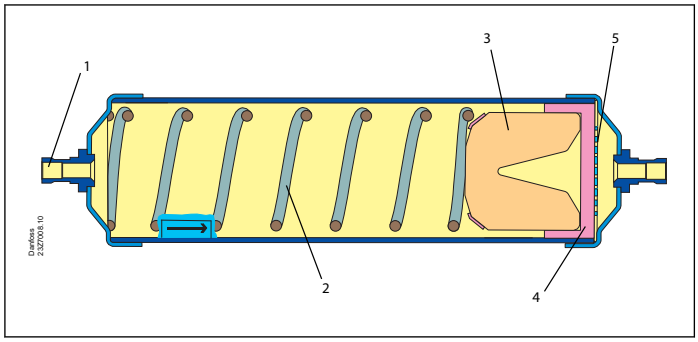

1. Inlet
2. Spring
3. Solid core
4. Polyester mat
5. Perforated plate

Technical Data

Table 1: Surface and volume

Filter	Solid core surface	Solid core volume	Filter drier volume (shell volume)	Filter drier volume (net volume)
	[cm²]	[cm³]	[l]	[l]
DMC / DCC 04	83	53	0.14	0.09
DMC / DCC 07	83	53	0.19	0.14
DMC / DCC 20	83	53	0.35	0.30
DMC 40	220	234	0.77	0.54

Table 2: Acid capacity

Filter	Acid capacity
	[g][1]
DCC 04	0.71
DCC 07	0.71
DCC 20	0.71

[1] Adsorption capacity of oleic acid at 0.05 TAN (Total Acid Number).

Temperature range: -40 – 70 °C

Figure 2: Solder connection (cu-plated steel connectors)

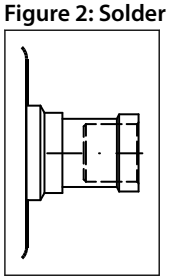

Capacity tables

Table 3: Drying and liquid capacity, type DMC

Type	Drying capacity [kg] refrigerant [1]												Liquid capacity [kW] [2]						Max. Working Pressure PS
	R134a		R404A		R507		R22		R407C		R410A								
	[°C]												R134a	R404A	R507	R22	R407C	R410A	
	24	52	24	52	24	52	24	52	24	52	24	52							[bar]
DMC 0432s	6.4	5.8	6.7	6.3	7.0	6.3	6.4	5.9	6.2	5.7	5.8	5.1	6.3	4.4	4.3	6.8	6.4	6.5	42
DMC 0732s	6.4	5.8	6.7	6.3	7.0	6.3	6.4	5.9	6.2	5.7	5.8	5.1	6.3	4.4	4.3	6.8	6.4	6.5	42
DMC 2032s	6.4	5.8	6.7	6.3	7.0	6.3	6.4	5.9	6.2	5.7	5.8	5.1	6.3	4.4	4.3	6.8	6.4	6.5	42
DMC 2033s	6.4	5.8	6.7	6.3	7.0	6.3	6.4	5.9	6.2	5.7	5.8	5.1	17.9	12.6	12.2	19.5	18.3	18.6	42
DMC 2034s	6.4	5.8	6.7	6.3	7.0	6.3	6.4	5.9	6.2	5.7	5.8	5.1	24.2	17.0	16.5	26.3	24.8	25.2	42
DMC 40163s	28.2	25.8	29.4	27.8	30.8	27.7	28.3	26.1	27.4	25.3	25.6	22.7	22.8	15.6	15.2	24.2	22.8	23.1	42
DMC 40164s	28.2	25.8	29.4	27.8	30.8	27.7	28.3	26.1	27.4	25.3	25.6	22.7	28.0	19.7	19.1	30.6	28.7	29.2	42

[1] Drying capacity is based on following moisture content test standards before and after drying:
R134a: 1050 – 50 ppm W
R404A, R507: 1020 – 50 ppm W
R407C: 1020 – 50 ppm W
R410A: 1050 – 50 ppm W
R22: 1050 – 60 ppm W
In accordance with ARI 710-2004

[2] Given in accordance with ARI 710-2004 for
te= -15 °C
tc= 30 °C
Δp = 0.07 bar

For technical data on other refrigerants, please contact your Danfoss Sales Representative

Table 4: Drying and liquid capacity, type DCC

Type	Drying capacity [kg] refrigerant [3]												Liquid capacity [kW] [4]						Max. Working Pressure PS
	R134a		R404A		R507		R22		R407C		R410A								
	[°C]												R134a	R404A	R507	R22	R407C	R410A	
	24	52	24	52	24	52	24	52	24	52	24	52							[bar]
DCC 0432s	4.9	4.5	5.1	4.9	5.4	4.8	4.9	4.6	4.8	4.4	4.5	4.0	6.3	4.4	4.3	6.8	6.4	6.5	42
DCC 0732s	4.9	4.5	5.1	4.9	5.4	4.8	4.9	4.6	4.8	4.4	4.5	4.0	6.3	4.4	4.3	6.8	6.4	6.5	42
DCC 2032s	4.9	4.5	5.1	4.9	5.4	4.8	4.9	4.6	4.8	4.4	4.5	4.0	6.3	4.4	4.3	6.8	6.4	6.5	42
DCC 2033s	4.9	4.5	5.1	4.9	5.4	4.8	4.9	4.6	4.8	4.4	4.5	4.0	17.9	12.6	12.2	19.5	18.3	18.6	42

[3] Drying capacity is based on following moisture content test standards before and after drying:
R134a: 1050 – 50 ppm W
R404A, R507: 1020 – 50 ppm W
R407C: 1020 – 50 ppm W
R410A: 1050 – 50 ppm W
R22: 1050 – 60 ppm W
In accordance with ARI 710-2004

[4] Given in accordance with ARI 710-2004 for
te= -15 °C
tc= 30 °C
Δp = 0.07 bar

For technical data on other refrigerants, please contact your Danfoss Sales Representative

Table 5: Type codes

Type	Codes	Description
Filter drier	D	Drier
Solid core	M	100% Molecular Sieve core
	C	80% Molecular Sieve / 20% activated alumina
Application	C	Combined filter drier/receiver
Filter housing volume (approx.)	04	4 in.^{3}
	07	7 in.^{3}
	20	20 in.^{3}
	40	40 in.^{3}
Solid core size	03	3 in.^{3}
	16	16 in.^{3}
Connection (filter connection in ⅛ of an inch increments)	2	¼ in. / 6 mm
	3	⅜ in. / 10 mm
	4	½ in. / 12 mm
Connection type	s	Solder connection (cu-plated steel connectors)

D	Filter drier
M	Solid core
C	Application
20	Filter housing volume (approx.)
03	Solid core size
2	Connection (filter connection in 1⁄8 of an inch increments)
s	Connection type

Dimensions and Weight

Figure 3: Solder connection (cu-plated steel connectors)

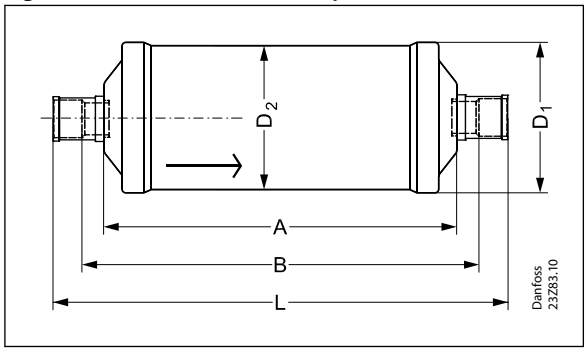

Table 6: Dimensions and Weight of DMC/DCC

Type	L	A	B	D_1	D_2	Net weight
	[mm]	[mm]	[mm]	[mm]	[mm]	[kg]
DMC / DCC 0432s	114	82	99	58	54	0.40
DMC / DCC 0732s	140	108	125	58	54	0.48
DMC / DCC 2032s	222	190	206	58	54	0.72
DMC / DCC 2033s	228	190	208	58	54	0.73
DMC / DCC 2034s	232	190	210	58	54	0.74
DMC 40163s	237	199	219	80	76	1.18
DMC 40164s	241	199	221	80	76	1.19

Selection

Table 7: Type selection is made considering the application

Refrigerant and oil types		DCC	DMC
Refrigerant	HFO	Recommended	Recommended
	HC [1]	Recommended	Recommended
	HFC	Recommended	Recommended
	HCFC	Recommended	Recommended
Oil	Mineral or AB	Recommended	Recommended
	POE or PAG, pure	Recommended	Recommended
	POE or PAG, with additives	Not recommended [2]	Recommended

[1] Only solder versions (cu-plated / pure copper) and connection sizes below 25 mm are approved for flammable refrigerants now
[2] DCC Hermetic filter driers contain activated alumina, which is a polar material used for acid adsorption. Many oil additives are also polar substances and can be adsorbed by the activated alumina, rendering them useless, and reducing the drier's acid capacity, though this is not harmful to the system

Selection example

Select the appropriate type (DMC or DCC) based on refrigerant and oil type. Then select the drier size based on the adsorption and liquid capacity required.

1. Amount of charge: 4 kg R134a at tL = 24 °C To dry 4 kg R134a at 24 °C from 1050 to 60 ppm moisture, a DMC 20 is necessary
2. Cooling capacity: Qe = 15 kW To obtain a mass flow corresponding to 15 kW cooling capacity with a DMC 0 filter drier, a 3⁄8 inch connection must be chosen. Larger connections can be chosen in accordance with the liquid line dimension
3. Result DMC 2033s or DMC 2034s can be used

If the initial moisture content is very small or a planned change of the filter drier is considered, a smaller filter drier size can be chosen. During selection consider amount of the refrigerant intended to keep in a reciever part of the filter.

Type	Drying capacity [kg] refrigerant [1]												Liquid capacity [kW] [2]						Max. Working Pressure PS
	R134a		R404A		R507		R22		R407C		R410A		R134a	R404A	R507	R22	R407C	R410A	
	[°C]																		
	24	52	24	52	24	52	24	52	24	52	24	52							[bar]
DMC 0433							4.9	4.6	4.9	4.5	4.4	4.1	7.71	5.52	5.36				42
DMC 2032s	4.9	4.6	5.2	5.0	5.3	4.9	4.9								5.36	8.44	7.96	8.21	42
DMC 2033s	4.9	4.6	5.2	5.0	5.3	4.9	4.9	4.6	4.9	4.5	4.4	4.1	15.69	11.17	10.84	17.14	16.14	16.61	42
DMC 2034s	4.9	4.6	5.2	5.0	5.3	4.9	4.9	4.6	4.9	4.5	4.4	4.1	32.65	25.73	25.05	37.42	35.85	38.68	42
DMC 40163s	256	242	275	261	280	259	259	240	256	237	233	215	15.69	11.17	10.84	17.14	16.14	16.61	42
DMC 40164s								240	256	237	233	215	32.65	25.73	25.05				42

Ordering

Figure 4: DMC and DCC

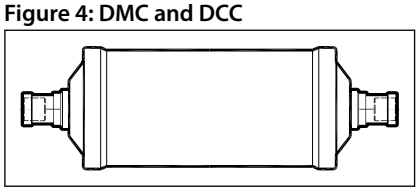

Table 8: Type DMC

Type	Connection	Industrial pack for OEM only		Multi pack	
		Qty.	Code no.	Qty.	Code no.
DMC 0432s	6 mm	16	023Z7012	24	023Z7019
DMC 0732s	6 mm	16	023Z7013	24	023Z7020
DMC 0732s	¼ in.	16	023Z7045	–	–
DMC 2032s	6 mm	10	023Z7007	18	023Z7021
DMC 2032s	¼ in.	10	023Z7008	18	023Z7022
DMC 2032.5s	5⁄16 in.	10	023Z7044	–	–
DMC 2033s	10 mm	10	023Z7014	18	023Z7023
DMC 2033s	⅜ in.	10	023Z7009	18	023Z7024
DMC 2034s	12 mm	10	023Z7015	–	–
DMC 2034s	½ in.	10	023Z7010	18	023Z7026
DMC 40163s	10 mm	6	023Z7016	8	023Z7027
DMC 40163s	⅜ in.	6	023Z7017	8	023Z7028
DMC 40164s	12 mm	6	023Z7018	8	023Z7029
DMC 40164s	½ in.	6	023Z7011	8	023Z7030

Table 9: Type DCC

Type	Connection	Industrial pack for OEM only	
		Qty.	Code no.
DCC 0432s	6 mm	16	023Z7000
DCC 0732s	6 mm	16	023Z7001
DCC 2032s	6 mm	10	023Z7002
DCC 2032s	¼ in.	10	023Z7003
DCC 2033s	10 mm	10	023Z7004

Certificates, declarations, and approvals

The list contains all certificates, declarations, and approvals for this product type. Individual code number may have some or all of these approvals, and certain local approvals may not appear on the list.

Some approvals may change over time. You can check the most current status at danfoss.com or contact your local Danfoss representative if you have any questions.

Table 10: Certificates, declarations, and approvals

Document name	Document type	Document topic	Approval authority
SA 6398	UL Certificate	Mechanical Safety Certificate	UL
023Z9601.AF	Manufacturers Declaration	ATEX/PED/RoHS	Danfoss
023Z9610.AA	Manufacturers Declaration	China RoHS	Danfoss
RU Д-DK.ГA08.B.00828_19	EAC Declaration	Machinery & Equipment	EAC

NOTE:
Only solder versions (cu-plated / pure copper) and connection sizes below 25 mm are approved for flammable refrigerants now.

ENGINEERING
TOMORROW

Online support

Danfoss offers a wide range of support along with our products, including digital product information, software, mobile apps, and expert guidance. See the possibilities below.

The Danfoss Product Store

The Danfoss Product Store is your one-stop shop for everything product related—no matter where you are in the world or what area of the cooling industry you work in. Get quick access to essential information like product specs, code numbers, technical documentation, certifications, accessories, and more.
Start browsing at store.danfoss.com.

Find technical documentation

Find the technical documentation you need to get your project up and running. Get direct access to our official collection of data sheets, certificates and declarations, manuals and guides, 3D models and drawings, case stories, brochures, and much more.

Start searching now at www.danfoss.com/en/service-and-support/documentation.

Danfoss Learning

Danfoss Learning is a free online learning platform. It features courses and materials specifically designed to help engineers, installers, service technicians, and wholesalers better understand the products, applications, industry topics, and trends that will help you do your job better.

Create your Danfoss Learning account for free at www.danfoss.com/en/service-and-support/learning.

Get local information and support

Local Danfoss websites are the main sources for help and information about our company and products. Find product availability, get the latest regional news, or connect with a nearby expert—all in your own language.

Find your local Danfoss website here: www.danfoss.com/en/choose-region.

Any information, including, but not limited to information on selection of product, its application or use, product design, weight, dimensions, capacity or any other technical data in product manuals, catalogues descriptions, advertisements, etc. and whether made available in writing, orally, electronically, online or via download, shall be considered informative, and is only binding if and to the extent, explicit reference is made in a quotation or order confirmation. Danfoss cannot accept any responsibility for possible errors in catalogues, brochures, videos and other material. Danfoss reserves the right to alter its products without notice. This also applies to products ordered but not delivered provided that such alterations can be made without changes to form, fit or function of the product. All trademarks in this material are property of Danfoss A/S or Danfoss group companies. Danfoss and the Danfoss logo are trademarks of Danfoss A/S. All rights reserved.